Since 1968

Home Network
COMMAX

DP-HP01

New & Renovation

COMMAX New Doorphone, excellence in design and quality. **DP**-HP01(M/S)

DP-HP01 COMMAX leads video door phone market and creats new trend. Out new product, DP-HP01, brings convenience and emotinal beauty in your house.

Home Network
COMMAX

DP-HP01

COMMAX leads video door phone market and creats new trend. Out new product, DP-HP01, brings convenience and emotinal beauty in your house.

DP-HP01(M)

DP-HP01(S)

▶ Indoor

DR-20H

DR-2K

▶ Outdoor

DR-2P

DR-2G

DR-2AN

DR-201A

Specification

- **Power source :** AC100/220/230/240 V
- **Wiring :**
  - DP-HP01~Door Unit: 2wires
  - DP-HP01(M)~DP-HP01(S): 5 wires
- **Mounting type :** Flush mounted type
- **Dimension :** 107 x 195 x 52(mm)

Features & function

- Door lock release
- Answering door call
- Room to room call & talk
- Supporting up to 2 audio door phones

Icons

• Interphone	◉
• Open	🔑

Wiring

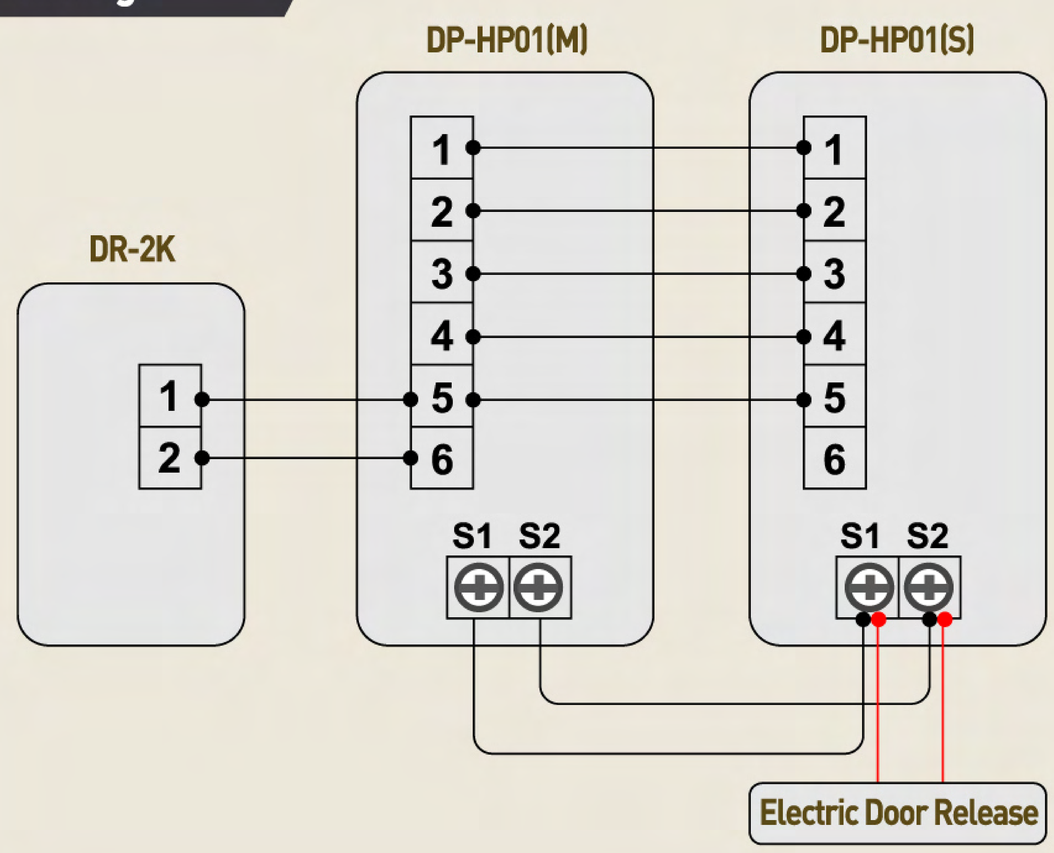

System Diagram

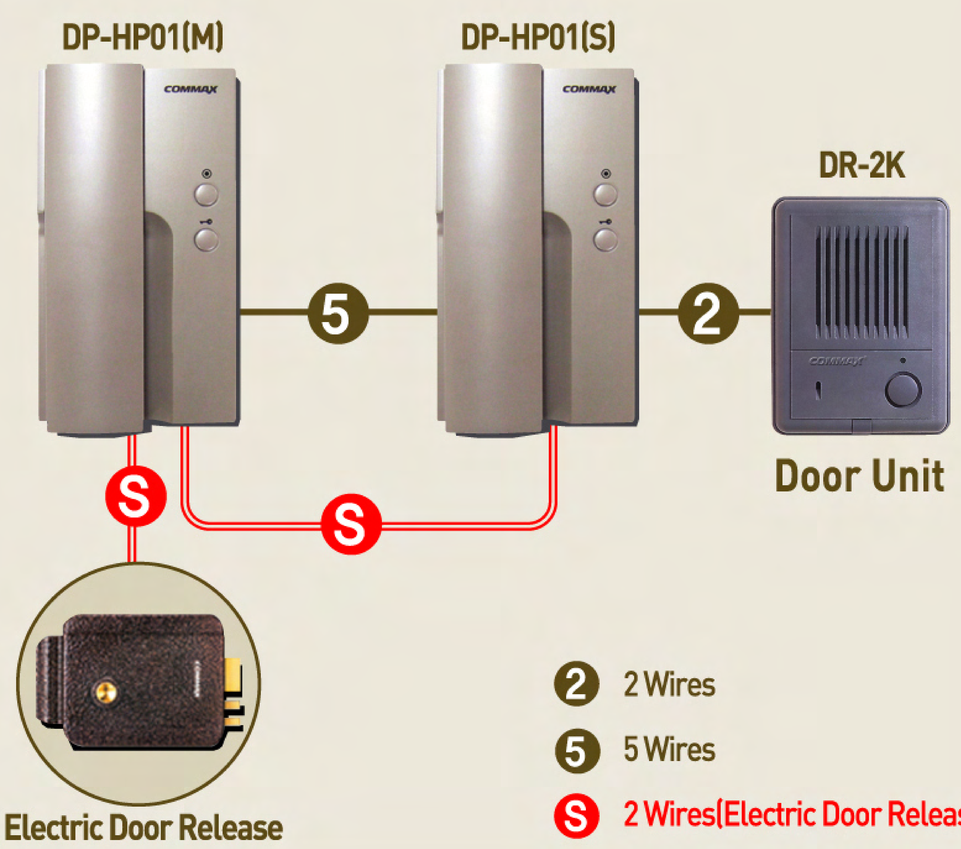

Distributed by

COMMAX Co.,Ltd.

#513-11, Sangdaewon-dong,
Jungwon-gu, Seongnam-city,
Kyunggi-do, Korea

Tel +82-31-7393-540~550
Fax +82-31-745-2133

www.commax.com